BD430(Default type IO Board)
BD431(Bidirectional output type IO Board)
Installation & Maintenance Manual

1. INTRODUCTION 2
1) *BD430 Board* 2
2) *BD431 Board* 3
2. DIGIATAL INPUT CONNECTION 4
1) *Pin Description* 4
2) *Connector Specification* 6
3) *Connection Specification* 7
4) *Connection Diagram* 7
3. DIGIATAL OUTPUT CONNECTION 8
1) *Pin Description* 8
2) *Connector Specification* 11
3) *Connection Specification* 11
4) *Connection Diagram* 12
4. DIP SWITCH SETTING 13
1) *BD430 Board* 13
2) *BD431 Board* 13
5. INSTALLATION 14

1. INTRODUCTION

1) BD430 Board

- Common (+) digital input 64 points (8 ports)
- Common (-) digital output 64 points (8 ports)
- Various option board installation
  - ✓ BD481 Board : Analog I/O, Conveyor Pulse Count, Arc Welding Machine I/F
  - ✓ UCS Module
  - ✓ CC-Link Module (with BD471 Board)
- IO expansion : 192 points (24 ports)
- AC fault detecting
- RS-232C communication with BD411(Main Board) : 57600bps

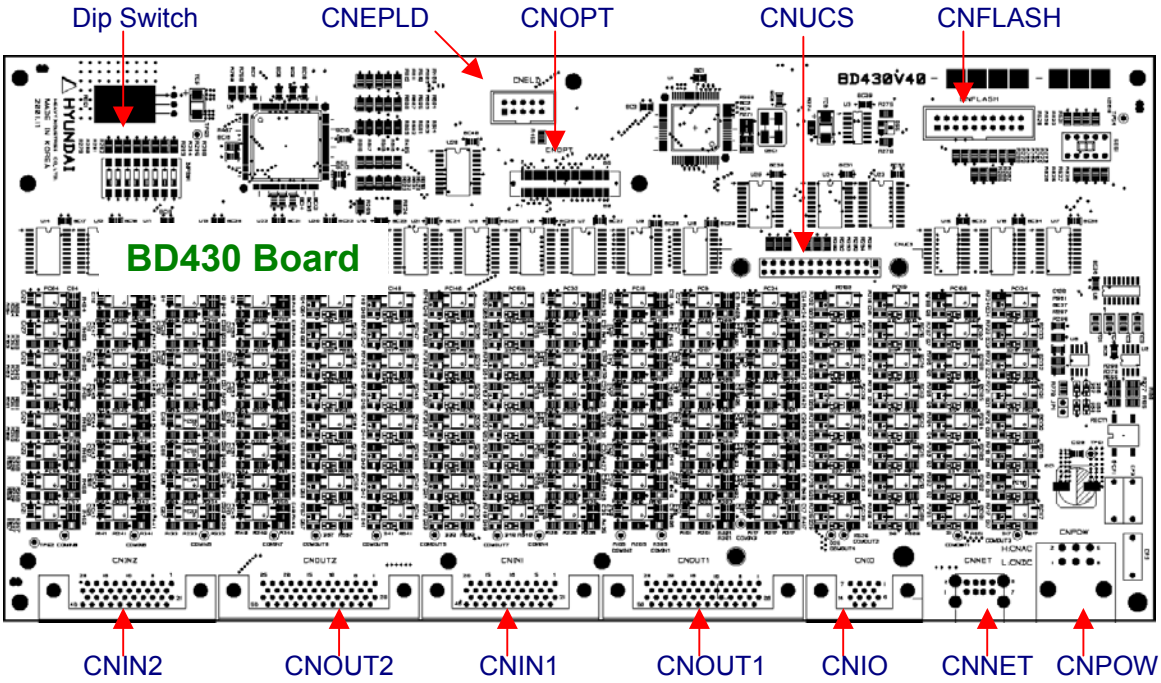

2) BD431 Board

- Common (+) digital input 64 points (8 ports)
- *Common (+) or common(-)* digital output 64 points (8 ports)
- Various option board installation
  - ✓ BD481 Board : Analog I/O, Conveyor Pulse Count, Arc Welding Machine I/F
  - ✓ UCS Module
  - ✓ CC-Link Module (with BD471 Board)
  - ✓ *Hilscher COM Module (with BD472 Board) for fieldbus systems*
- IO expansion : 192 points (24 ports)
- AC fault detecting
- RS-232C communication with BD411(Main Board) : 57600bps

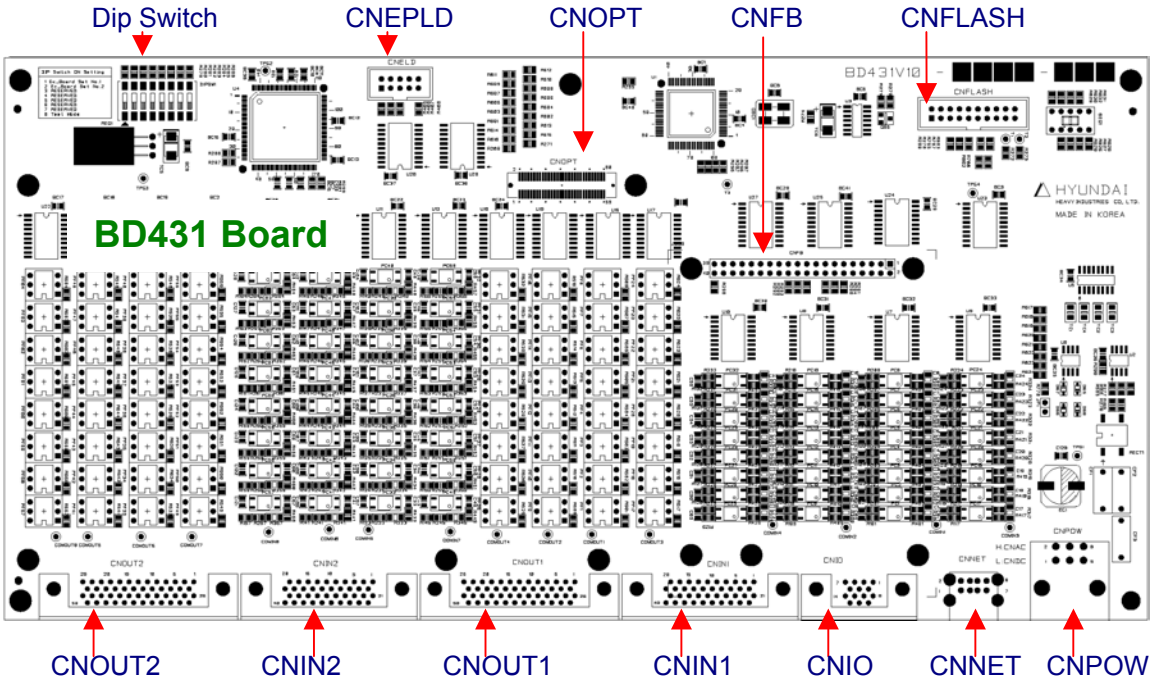

2. DIGIATAL INPUT CONNECTION

1) Pin Description

- **CNIN1**

Pin No.	Symbol	Description (for expanded board / for base board)
1	SDI01	general-purpose input 1 / MOTON ON SW input
2	SDI02	general-purpose input 2 / reserved system input
3	SDI03	general-purpose input 3 / START SW input
4	SDI04	general-purpose input 4 / STOP SW input
5	SDI05	general-purpose input 5 / reserved system input
6	SDI06	general-purpose input 6 / reserved system input
7	SDI07	general-purpose input 7 / reserved system input
8	SDI08	general-purpose input 8 / reserved system input
9	COMIN1	common voltage input (user's power)
10	COMIN1	: +24 V or 0V for SDI01~SDI08
11	SDI09	general-purpose input 9 / AUTO/MAN SW input
12	SDI10	general-purpose input 10 / OL input
13	SDI11	general-purpose input 11 / MSHPON input
14	SDI12	general-purpose input 12 / DMAN input
15	SDI13	general-purpose input 13 / EM STOP input
16	SDI14	general-purpose input 14 / TSP input
17	SDI15	general-purpose input 15 / OVT input
18	SDI16	general-purpose input 16 / ARM input
19	COMIN2	common voltage input (user's power)
20	COMIN2	: +24 V or 0V for SDI09~SDI16
21	SDI17	general-purpose input 17 / EX MON input
22	SDI18	general-purpose input 18 / PB DET input
23	SDI19	general-purpose input 19 / OH input
24	SDI20	general-purpose input 20 / OV input
25	SDI21	general-purpose input 21 / MSPRIN input
26	SDI22	general-purpose input 22 / AMP TYP input
27	SDI23	general-purpose input 23 / SG input
28	SDI24	general-purpose input 24 / reserved system input

29	COMIN3	common voltage input (user's power)
30	COMIN3	: +24 V or 0V for SDI17~SDI24
31	SDI25	general-purpose input 25 / WCR input
32	SDI26	general-purpose input 26 / COLLISION SEN input
33	SDI27	general-purpose input 27 / WIRE STICK input
34	SDI28	general-purpose input 28 / WELDER ERR input
35	SDI29	general-purpose input 29 / WIRE STATE input
36	SDI30	general-purpose input 30 / GAS STATE input
37	SDI31	general-purpose input 31 / reserved system input
38	SDI32	general-purpose input 32 / reserved system input
39	COMIN4	common voltage input (user's power)
40	COMIN4	: +24 V or 0V for SDI25~SDI32

- **CNIN2**

Pin No.	Symbol	Description
1	DI01	general-purpose input 1
2	DI02	general-purpose input 2
3	DI03	general-purpose input 3
4	DI04	general-purpose input 4
5	DI05	general-purpose input 5
6	DI06	general-purpose input 6
7	DI07	general-purpose input 7
8	DI08	general-purpose input 8
9	COMIN5	common voltage input (user's power)
10	COMIN5	: +24 V or 0V for DI01~DI08
11	DI09	general-purpose input 9
12	DI10	general-purpose input 10
13	DI11	general-purpose input 11
14	DI12	general-purpose input 12
15	DI13	general-purpose input 13
16	DI14	general-purpose input 14
17	DI15	general-purpose input 15
18	DI16	general-purpose input 16
19	COMIN6	common voltage input (user's power)

20	COMIN6	
	DI17	general-purpose input 17
22	DI18	general-purpose input 18
23	DI19	general-purpose input 19
24	DI20	general-purpose input 20
25	DI21	general-purpose input 21
26	DI22/WI	general-purpose input 22(welding complete signal input)
27	DI23/EX_START	general-purpose input 23(external start signal input)
28	DI24/EX_STOP	general-purpose input 24(external stop signal input
29	COMIN7	common voltage input (user's power)
30	COMIN7	: +24 V or 0V for DI17~DI24
31	DI25/PI1	general-purpose input 25(external program select signal 1)
32	DI26/PI2	general-purpose input 26(external program select signal 2)
33	DI27/PI3	general-purpose input 27(external program select signal 3)
34	DI28/PI4	general-purpose input 28(external program select signal 4)
35	DI29/PI5	general-purpose input 29(external program select signal 5)
36	DI30/PI6	general-purpose input 30(external program select signal 6)
37	DI31/PI7	general-purpose input 31(external program select signal 7)
38	DI32/PI8	general-purpose input 32(external program select signal 8)
39	COMIN8	Common voltage input (user's power)
40	COMIN8	: +24 V or 0V for DI25~DI32

2) Connector Specification

- Board-side : 3M MDR 10240-52A2JL

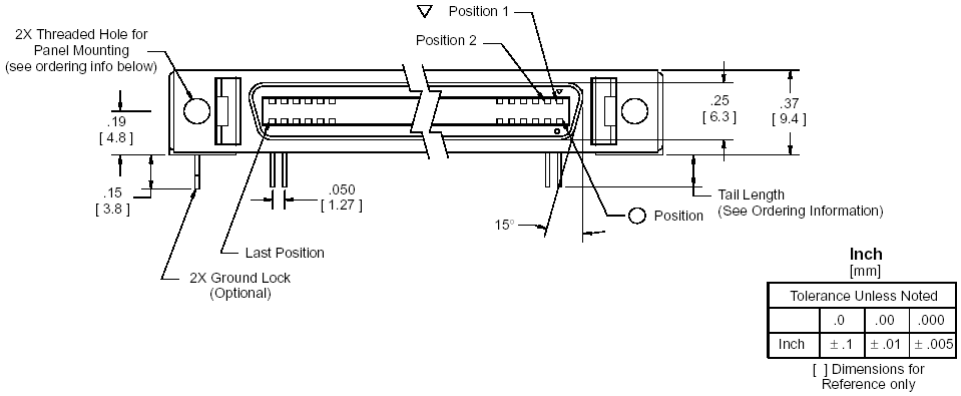

- Plug-side : 3M MDR 10140-3000VE (HOOD;10340-55F0-008)

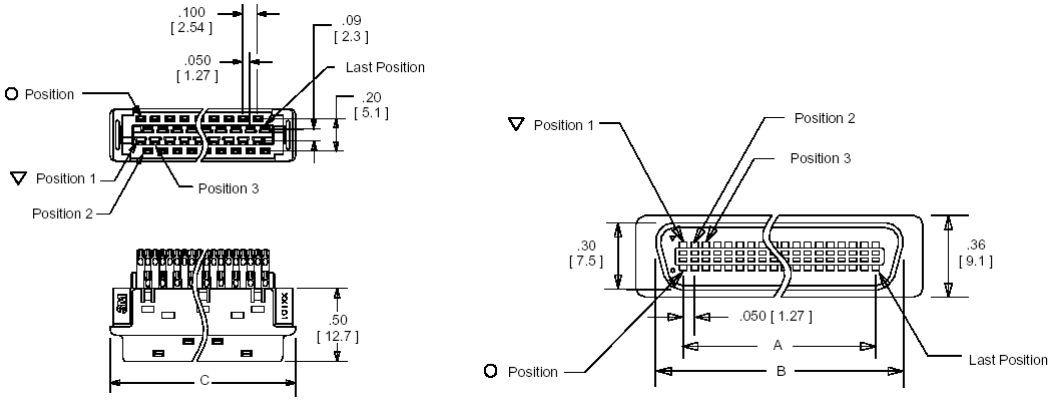

3) Connection Specification

- Input port device : AC input type photocoupler
- Input impedance = 3kΩ
- Common (+) input voltage = 24VDC
- Common (-) input voltage = 0VDC

4) Connection Diagram

- Common (+) or (-) voltage

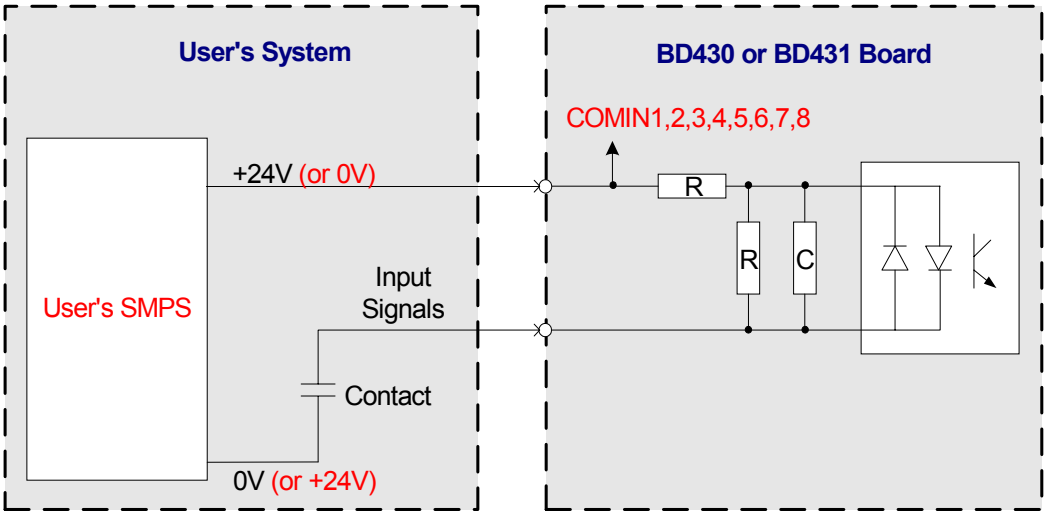

3. DIGIATAL OUTPUT CONNECTION

1) Pin Description

- **CNOUT1**

Pin No.	Symbol	Description (for expanded board / for base board)
1	SDO01	general-purpose output 1 / MOTOR ON LED output
2	SDO02	general-purpose output 2 / reserved system output
3	SDO03	general-purpose output 3 / START LED output
4	SDO04	general-purpose output 4 / STOP LED output
5	SDO05	general-purpose output 5 / reserved system output
6	SDO06	general-purpose output 6 / reserved system output
7	SDO07	general-purpose output 7 / reserved system output
8	SDO08	general-purpose output 8 / reserved system output
9	COMOUT1	common voltage input (user's power)
10	COMOUT1	: +24 V or 0V for SDO01~SDO08
11	SDO09	general-purpose output 9 / SYS ERR LED output
12	SDO10	general-purpose output 10 / reserved system output
13	SDO11	general-purpose output 11 / TORCH SW output
14	SDO12	general-purpose output 12 / INCHING output
15	SDO13	general-purpose output 13 / RETRACT output
16	SDO14	general-purpose output 14 / STICK CHK output
17	SDO15	general-purpose output 15 / GAS VALVE output
18	SDO16	general-purpose output 16 / WELDOUT RSV output
19	COMOUT2	common voltage input (user's power)
20	COMOUT2	: +24 V or 0V for SDO09~SDO16
21	N.C	no connection
22	N.C	no connection
23	N.C	no connection
24	N.C	no connection
25	N.C	no connection
26	N.C	no connection
27	N.C	no connection
28	N.C	no connection

29	N.C	no connection
30	N.C	no connection
31	SDO17	general-purpose output 17 / MOTOR POWER ON output
32	SDO18	general-purpose output 18 / BRAKE RELEASE ON1 output
33	SDO19	general-purpose output 19 / BRAKE RELEASE ON2 output
34	SDO20	general-purpose output 20 / BRAKE RELEASE ON3 output
35	SDO21	general-purpose output 21 / BRAKE RELEASE ON4 output
36	SDO22	general-purpose output 22 / BRAKE RELEASE ON5 output
37	SDO23	general-purpose output 23 / reserved system output
38	SDO24	general-purpose output 24 / PLAYBACK output
39	COMOUT3	common voltage input (user's power)
40	COMOUT3	: +24 V or 0V for SDO17~SDO24
41	SDO25	general-purpose output 25 / RELEASE output
42	SDO26	general-purpose output 26 / MSPRON output
43	SDO27	general-purpose output 27 / reserved system output
44	SDO28	general-purpose output 28 / reserved system output
45	SDO29	general-purpose output 29 / reserved system output
46	SDO30	general-purpose output 30 / reserved system output
47	SDO31	general-purpose output 31 / reserved system output
48	SDO32	general-purpose output 32 / reserved system output
49	COMOUT4	common voltage input (user's power)
50	COMOUT4	: +24 V or 0V for SDO25~SDO32

- **CNOUT2**

Pin No.	Symbol	Description
1	DO01	general-purpose output 1
2	DO02	general-purpose output 2
3	DO03	general-purpose output 3
4	DO04	general-purpose output 4
5	DO05	general-purpose output 5
6	DO06	general-purpose output 6
7	DO07	general-purpose output 7
8	DO08	general-purpose output 8
9	COMOUT5	common voltage input (user's power)
10	COMOUT5	: +24 V or 0V for DO01~DO08

11	DO09	general-purpose output 9
12	DO10	general-purpose output 10
13	DO11	general-purpose output 11
14	DO12	general-purpose output 12
15	DO13	general-purpose output 13
16	DO14	general-purpose output 14
17	DO15	general-purpose output 15
18	DO16	general-purpose output 16
19	COMOUT6	common voltage input (user's power)
20	COMOUT6	: +24 V or 0V for DO09~DO16
21	N.C	no connection
22	N.C	no connection
23	N.C	no connection
24	N.C	no connection
25	N.C	no connection
26	N.C	no connection
27	N.C	no connection
28	N.C	no connection
29	N.C	no connection
30	N.C	no connection
31	DO17	general-purpose output 17
32	DO18	general-purpose output 18
33	DO19	general-purpose output 19
34	DO20	general-purpose output 20
35	DO21	general-purpose output 21
36	DO22	general-purpose output 22
37	DO23/GUN1	general-purpose output 23 / Gun signal output 1
38	DO24/GUN2	general-purpose output 24 / Gun signal output 2
39	COMOUT7	common voltage input (user's power)
40	COMOUT7	: +24 V or 0V for DO17~DO24
41	DO25/MX	general-purpose output 25 / MX signal output
42	DO26/PROG_END	general-purpose output 26 / program end output
43	DO27/TOT_ERR	general-purpose output 27 / system error output
44	DO28/IL_ERR	general-purpose output 28 / interlock error output
45	DO29/START'G	general-purpose output 29 / robot playback output

46	DO30/AUTO_MD	general-purpose output 30 / AUTO mode output
47	DO31/ROBOT_OK	general-purpose output 31 / robot-start preparation complete
48	DO32/ORG_POS	general-purpose output 32 / original position status output
49	COMOUT7	common voltage input (user's power)
50	COMOUT7	: +24 V or 0V for DO25~DO32

2) Connector Specification

- Board-side : 3M MDR 10250-52A2JL

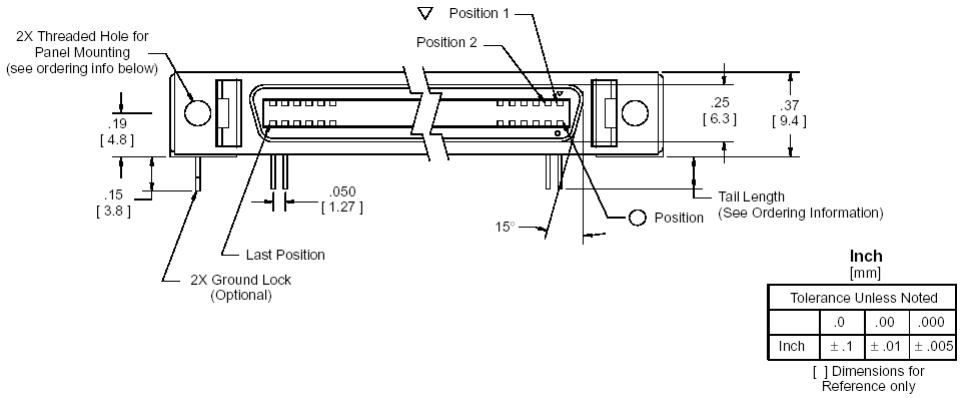

- Plug-side : 3M MDR 10150-3000VE (HOOD;10350-52F0-008)

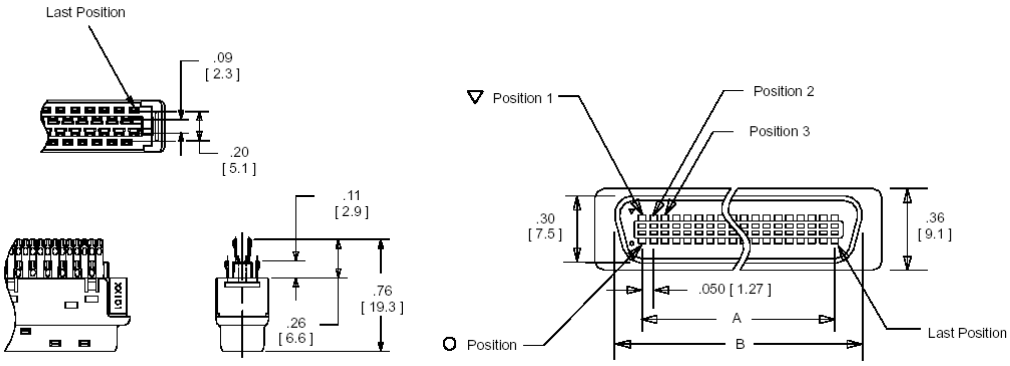

3) Connection Specification

- BD430 Board
  - ✓ output port device : PNP transistor open collector
  - ✓ Output rating = 125mA(Continuous load current), 24VDC

- ✓ Common (-) input voltage = 0VDC

- BD431 Board
  - ✓ output port device : MOS relay
  - ✓ Output rating = 125mA(Continuous load current), 24VDC
  - ✓ Common (+) input voltage = 24VDC
  - ✓ Common (-) input voltage = 0VDC

4) Connection Diagram

- BD431 Board : Common (+) or (-) voltage

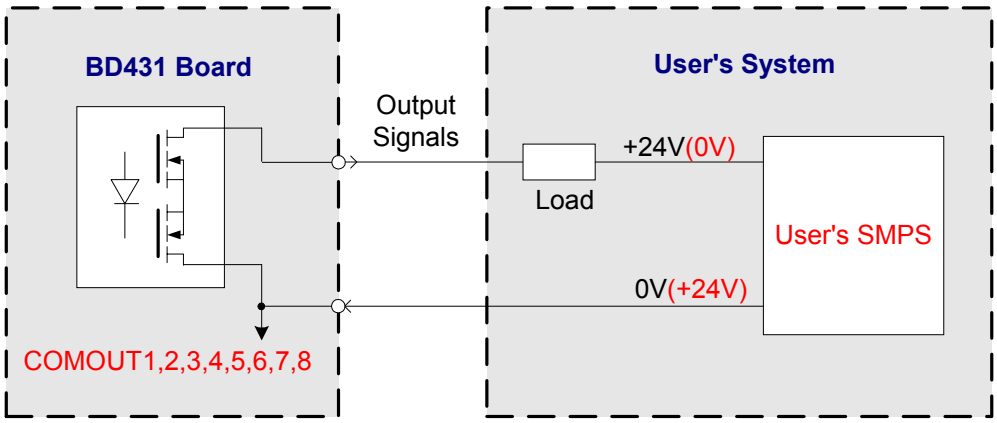

- BD430 Board : Common (-) voltage ***only***

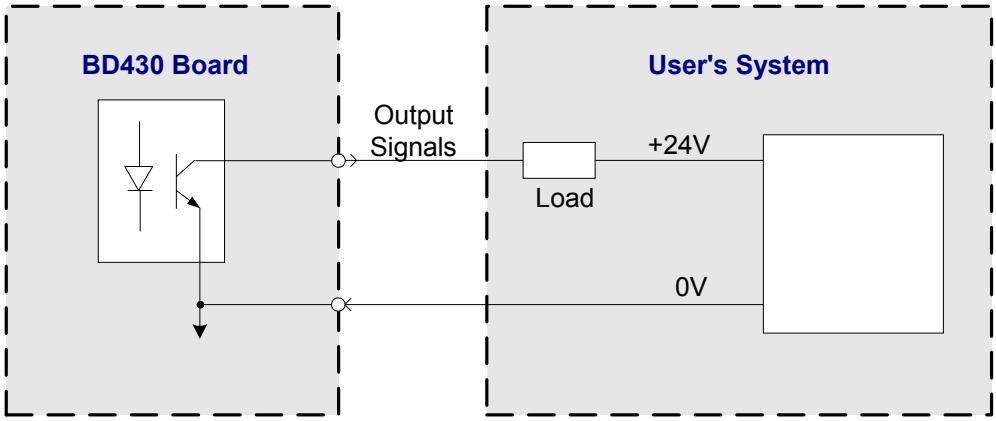

4. DIP SWITCH SETTING

1) BD430 Board

Pos. No.	Status	Description	Default
1	-	Expanded board number setting Board Number = 2^(Pos.2) + 2^(Pos.1) where Pos.2, Pos.1 = 1 (at ON) 0 (at OFF)	OFF
2	-		OFF
3	OFF	BD48X board is not installed.	OFF
	ON	BD48X board is installed.	
4	OFF	AC fault signal (VE) is enabled.	OFF
	ON	AC fault signal (VE) is disabled.	
5	OFF	CPU error signal is disabled.	ON
	ON	CPU error signal is enabled.	
6	OFF	Downloading to Flash Memory(ROM) is disabled.	OFF
	ON	Downloading to Flash Memory(ROM) is enabled.	
7	OFF	Communication Baudrate with Main = 38400bps	ON
	ON	Communication Baudrate with Main = 57600bps	
8	OFF	Normal Operating Mode	OFF
	ON	Board Test Mode	

2) BD431 Board

Pos. No.	Status	Description	Default
1	-	Expanded board number setting Board Number = 2^(Pos.2) + 2^(Pos.1) where Pos.2, Pos.1 = 1 (at ON) 0 (at OFF)	OFF
2	-		OFF
3,4,5,6,7	-	Reserved	OFF
8	OFF	Normal Operating Mode	OFF
	ON	Board Test Mode	

5. INSTALLATION

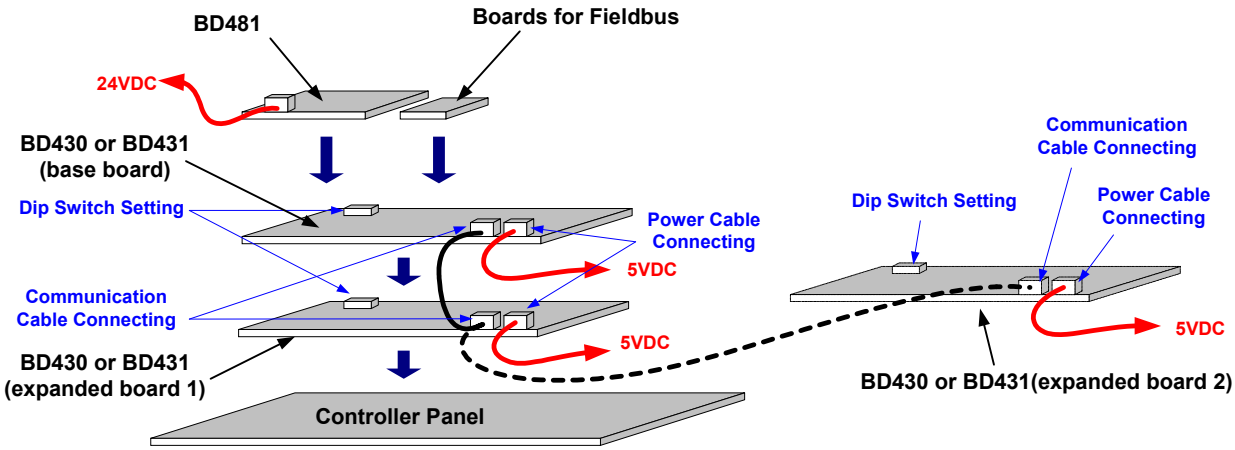

1) BD430 Board

When use BD430 as expanded board,

- Dip switch no. 4 must be on (AC fault signal disabled) and no.5 must be off (CPU ERR signal disabled).
- Dip switch no.1,2 must be set specific expanded board number.(Ref.4-1))
- Install expanded boards, base board (and BD481, board for fieldbus).
- Connect communication cable(RS485), power cable.
- Power on

2) BD431 Board

When use BD431 as expanded board,

- Dip switch no.1,2 must be set specific expanded board number.(Ref.4-2))
- Install expanded boards, base board (and BD481, board for fieldbus).
- Connect communication cable(RS485), power cable.
- Power on